EV Ultra Dual

Install and operate guide

English – 2.6.1 – Oktober 2026

smappee

Document accuracy

The specifications and other information in this document were verified to be accurate and complete at the time of its publication. Due to ongoing product improvement, this information is subject to change at any time without prior notice. For the latest information, see our online documentation: smappee.com/downloads

Table of contents

1. Introduction 4
2. Safety instructions 5
3. Overview of the EV Ultra 6
4. Prepare the installation 12
5. Prepare the foundation of the EV Ultra 15
6. Installation and configuration 22
7. EV Ultra Commissioning 33
8. Maintenance 34
Annexes 37

1. Introduction

Thank you for purchasing this Smappee EV Ultra charging station for electric vehicles, the smartest DC charging station for businesses.

This installation and user manual tells you how to install and use the Smappee EV Ultra. We recommend that you read the contents of this manual carefully, to ensure a safe and proper installation and enable to use all the advanced features of this product to the full.

Intended use

This charging station is intended to charge electric vehicles by connection of a CCS2 charging cable without intermediate adapters. For example, to charge vehicles with an unsupported charging standard or have a longer charging cable.

Use for any other purpose than EV charging as defined in the IEC 61851-series is not and constitutes misuse of the charging station. Only qualified, trained and authorised persons are allowed to install, maintain and/or repair the charging station and make sure that the technical specifications and installation requirements are met. Incorrect installation and testing of the charging station could potentially damage either the vehicle's battery or the device. Any resulting damage is excluded from the warranty of the device. Any modification that is not in writing confirmed by Smappee will void the warranty. For more information, refer to: smappee.com.

Support

Only qualified electricians or equivalent may install the Smappee EV Ultra. If you have any questions, please contact your service partner.

Please have the following information ready to hand to speed up the process: Article number and serial number which you can find on the identification label of the EV Ultra.

Should your local distributor be unable to help you, or you have a suggestion for us, you can contact Smappee at: support@smappee.com.

Smappee NV
Evolis 104
8530 Harelbeke
Belgium

2. Safety instructions

2.1. Safety warning

Fully read and follow the safety instructions below before you install, service or use your Smappee EV Ultra. The installer must ensure that the charging station is installed in accordance with the relevant national and local regulations.

Carrying out activities on this charging station without the relevant knowledge and qualifications can lead to serious accidents and death. Only carry out tasks for which you are qualified and have been fully instructed.

Incorrect installation, repairs or modifications can result in danger to the user and may void the warranty and liability.

2.2. Safety precautions

⚠	CAUTION Risk of electric shock. Refer to the accompanying documentation whenever you see this symbol.

Please observe the following safety precautions to avoid potential electric shock, fire, or personal injury:

- The charging station is intended exclusively for charging electric vehicles and, when installed correctly, may be used by untrained individuals.
- Switch off electrical power supply to the charging station before installation or maintenance work. Wait 1 minute after switching off the power supply.
- Do not use the charging station if damaged / defective.
- Do not immerse the charging station in water or any other liquids.
- Do not expose the charging station to heat, flame or extreme cold.
- Do not attempt to open, repair, or service any parts. Contact Smappee or your service partner for further information.
- Only use the charging station under the specified operating conditions.
- Do not allow children to operate a charging station.
- When a charging station is in use, adult supervision of any children present is required.
- While charging the charging cable must be completely unwound and connected to the electric vehicle without overlapping loops. This to avoid the risk of overheating the charging cable.

2.3. Keeping order

- After charging, put the charging cable properly back so that it does not present a tripping hazard.
- Make sure the charging cable cannot become damaged (kinked, compressed or driven over).
- Do not place any objects on the charging station.

3. Overview of the EV Ultra

3.1. Models

Charging stations

Article no.	EAN	Description
EVU-80D-C3-B	5425036934955	EV Ultra Black, Standalone, 2 connectors, 40 kW per connector
EVU-80D-C3-W	5425036934368	EV Ultra White, Standalone, 2 connectors, 40 kW per connector
EVU-240D-C3-B	5425036934382	EV Ultra Black, Standalone, 2 connectors, 120 kW per connector
EVU-240D-C3-W	5425036934986	EV Ultra White, Standalone, 2 connectors, 120 kW per connector

Metal anchor (to be ordered separately)

Article no.	EAN	Description
EVU-ANCHOR	5425036934450	EV Ultra Mounting anchor

Concrete foundation (to be ordered separately)

Article no.	EAN	Description
EVU-CONCRETE-FOUNDATION	5425036935693	EV Ultra Concrete foundation

Cable Management System (to be ordered separately)

Article no.	EAN	Description
EVU-CMS-D-B	5425036936362	EV Ultra Dual connector cable management system

3.2. Directional determination

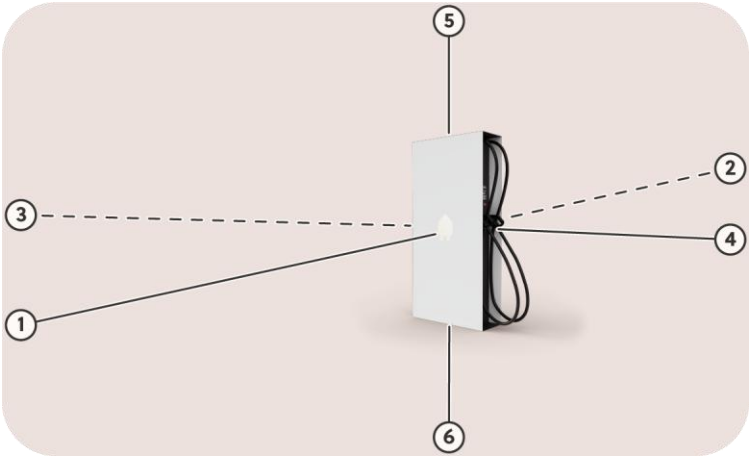

Image 1: Directional determination

Id	Description
1	Front
2	Rear
3	Left
4	Right
5	Top
6	Bottom

3.3. Identification label

Position of the identification label of the EV Ultra

The identification label is located at the top of the right side of the charging station.

Image 2: Position of the identification label

Content of the identification of the EV Ultra

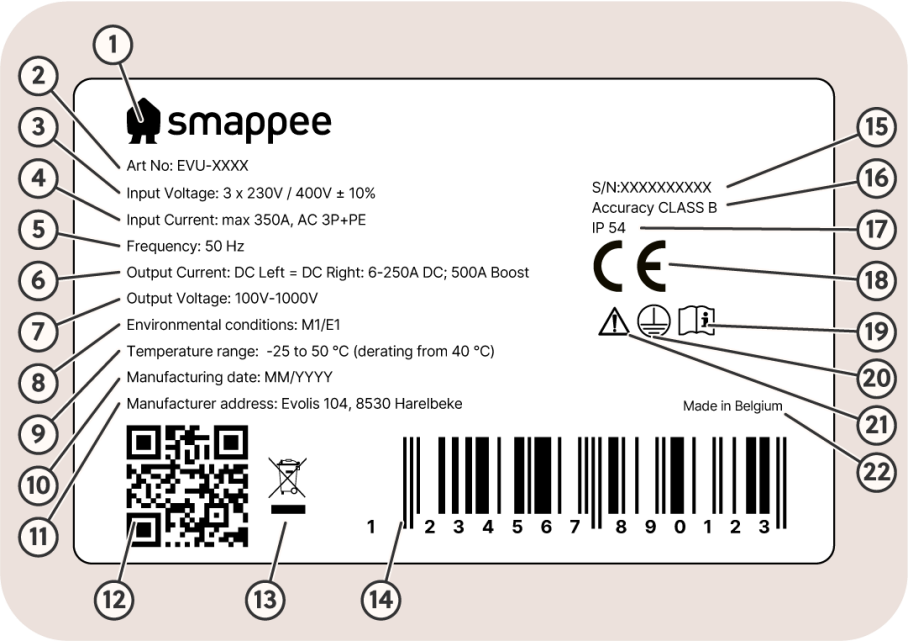

Image 3: Identification label

No.	Description
1	Manufacturer’s logo
2	Article number, refer to page 6
3	Input voltage
4	Input current
5	Frequency
6	Output current
7	Output voltage
8	Environmental conditions
9	Temperature range
10	Manufacturing date
11	Manufacturer address
12	QR code to scan during configuration of the charging station
13	Waste disposal symbol
14	Barcode
15	Serial number
16	Accuracy
17	IP rating
18	CE
19	Manual
20	Protective earth
21	Warning symbol
22	Manufacturer country

3.4. Technical specifications

Feature	Description
Physical properties	
Dimensions	1870 x 920 x 325 mm
Charging unit weight (excluding packaging)	EV Ultra 40D: 240 kg EV Ultra 120D: 340 kg
Anchor	23 kg
Charging cable length	3.25 m
Stationary / moveable	Fixed installation
External design	Enclosed assembly
Mounting method	Ground mounted, with supplied anchor
AC input	
Power supply	3P + PE
Auxiliary power supply	5G2.5 mm²
Rated voltage (U_N)	400 Vac ± 10 %
Rated frequency (f_N)	50 Hz
Nominal input current	EV Ultra 40D: 120 A EV Ultra 120D: 350 A
Power factor	> 0.98 at full capacity
Efficiency	95% at full capacity
Connection method	AC, permanently connected
Integrated protective measures	Galvanically isolated inverters
External protective devices	• Main power supply to the inverters Overvoltage category III • Auxiliary power supply 30 mA residual current device Type A or B (according to local regulations)
DC output	
Charge mode	Mode 4 (IEC 61851)
DC Plug	CCS2
Connection case	Case C (fixed cable) (IEC 61851)
Maximum current	500 A (boost mode)
Voltage	100 V – 1000 V
Nominal power charging point	EV Ultra 40D: maximum 40 kW EV Ultra 120D: maximum 120 kW
Nominal power charging station	EV Ultra 40D: maximum 80 kW EV Ultra 120D: maximum 240 kW

Feature	Description
Interfaces & Connectivity	
Information status	6.5” RGB Display
Session activation	unauthenticated, QR code / RFID (Optional payment terminal)
Connectivity	Ethernet 100BASE-T LTE Cat M1 (4G)
Communication protocol	OCPP 1.6 J, ready for update to OCPP 2.0.1
Metering	kWh meter compliant with IEC 62053-21
Certifications and Standards	
Product certification	CE
Standards	IEC 61851-1, IEC 61851-21-2, IEC 61851-23, ISO 15118-2, ISO 15118-3
Environment	
Enclosure material	Powder coated steel
Enclosure standard colours	RAL 9016 (star white) + RAL 7021 (black grey) Optional customisation
IP rating	IP 54
Mechanical impact protection	IK 10
Pollution degree	3
Electrical safety class	I
Standby power	50 W
Acoustic noise	0 dB to 60 dB
Environmental conditions	Indoor and outdoor use
Operating temperature	-25 °C to 50 °C (power derating from 40 °C)
Storage temperature	-25 °C to 70 °C
Relative humidity	0 % to 95 %, non-condensing
Operating altitude	0 to 2.000 m
Access	Locations with restricted and non-restricted access

NOTE

- The operating temperate assumes the ambient temperature of a product delivered in the default enclosure colours RAL 9016 (star white) or RAL 7021 (black grey). Direct exposure to sunlight may have an adverse effect on the temperature range.
- If the product is exposed to lower or higher ambient temperatures, continuous operation cannot be guaranteed. If temperatures exceed the maximum values, the charging station will automatically decrease the charging current to decrease the internal temperature of the charging station. This stabilises the internal temperature and makes it less likely that a transaction will be unexpectedly paused.
- If the product is directly exposed to sunlight, the automated temperature management may automatically start below the maximum ambient temperature. Therefore, wherever possible, avoid exposing the charging station to direct sunlight.
- Where products are exposed to the elements of nature, the enclosure can be subject to gradual aging of the material, which can result in product discolouration over time. Therefore, wherever possible, place the product in a sheltered place to optimise the life of the materials.

4. Prepare the installation

First step is to prepare the physical installation of the EV Ultra as described in this chapter.

4.1. Installation prerequisites

- Calculate the existing electrical load to find the maximum operating current for the charging station. Note that with the Smappee Overload functionality more charging stations or the total maximum operating current can be higher than the physical installation allows.
- Obtain all necessary permits from the relevant local authority.
- Refer to local wiring regulations to select the conductor sizes and use only copper or aluminium conductors.
- Make sure that the installation area of the charging station is adequate for usability and ventilation purposes.
- Use the correct tools and provide sufficient material resources and protection measures.
- Route the power supply cables to the position where the EV Ultra will be installed together with an Ethernet cable for the internet connection.

NOTE

To facilitate a smooth installation, ensure that the following cable lengths are available at the EV Ultra installation site:

- Power supply cable: minimum 50 cm
- Auxiliary power supply cable: minimum 100 cm
- Shielded CAT 6 cable: minimum 100 cm

NOTE

- Think about accessibility and usage of the charging station for the driver: For example, placed lengthwise in the middle of 2 parking spots. Make sure that there is sufficient space around the charging station for service and maintenance operations as specified in the IEC 60204-1 standard. This also lets adequate airflow for normal operation of the charging station.
- Below is the mandatory and recommended free space around the EV Ultra.

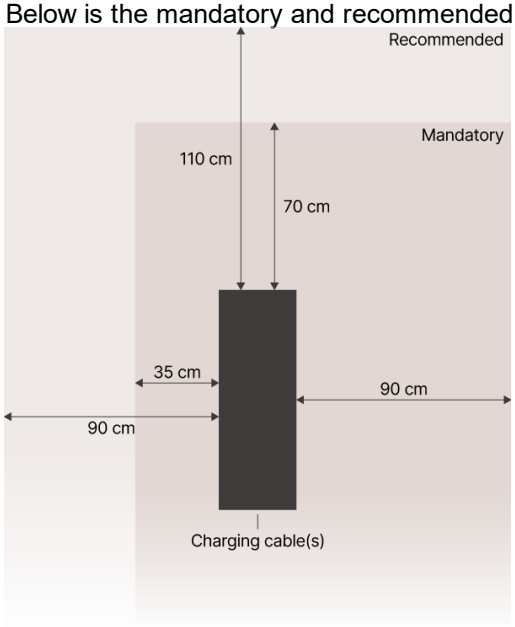

4.2. Power supply

- The correct cable section of the supply cable depends on the power rating and distance between the meter cabinet and the charging station. The voltage drop must not exceed 5%. It is advisable to have a maximum voltage drop of 3 %.
- The cable lugs that can be fitted have a width of maximum 35 mm.
- The power supply trajectory from the circuit breaker panel up to the EV Ultra charging station must be protected against short-circuiting and over-current with B or C circuit breakers (or otherwise in compliance with local standards and regulations)
- The power supply trajectory from the circuit breaker panel up to the EV Ultra charging station must be protected against short-circuiting and over-current with B or C circuit breakers to meet the requirements of overvoltage category III (or otherwise in compliance with local standards and regulations)
- An RCD of type A or B (according to local regulations) with rated residual operating current of 30 mA must be installed for the auxiliary power supply.A charging station must always be connected on a dedicated power circuit.
- Route the power supply cables to the position where the charging station will be installed together with an Ethernet cable for the internet connection.
- Make sure the power supply cables are positioned through the dummy plate of the EV Ultra Mounting anchor.

	NOTE All cables enter the charging station through the EV Ultra Mounting anchor or EV Ultra Concrete foundation.

- Local regulations may be applicable and can vary depending upon the region or country.

4.3. Lifting supplies (not included)

- Crane
- Suitable lifting accessories (four lifting eye bolts are included)

4.4. Tools (not included)

- Screwdrivers
- Hex keys (2.5 mm, 10 mm)
- Torx key (T30)
- Torque wrench
- 13 mm socket wrench with ratchet handle (for anchor)
- 17 mm socket wrench with ratchet handle
- Wire stripper and cutter
- Needle-nose pliers
- Multimeter and earth ground meter
- RJ45 crimping tool

4.5. Supplies (not included)

- Shielded CAT 6 Ethernet cable and two RJ45 connectors for internet access
- Cable lugs M10 with a maximum width of 35 mm
- Power supply cables
- Spray with airtight material such as polyurethane foam

4.6. Transport, storage and unboxing the EV Ultra

Transport and storage

- Disconnect electrical power supply before removing the charging station for storage or relocation.
- Only transport and store the charging station in its original packaging. No liability for damage incurred will be accepted if the charging station is transported in non-standard packaging.
- Store the charging station in a dry environment within the temperature range specified in the technical specifications.

Unboxing

The EV Ultra is delivered standing on a euro pallet. First remove the cardboard packaging.

Keep in mind to store the cardboard, as this can be used to safely store loose panels while installing the EV Ultra.

5. Prepare the foundation of the EV Ultra

Laying the foundation for the EV Ultra requires meticulous work, as it must support a heavy weight over a long period without compromising stability.

There are two options to prepare the foundation of the EV Ultra:

1. Using the metal EV Ultra Mounting anchor.
2. Using the EV Ultra Concrete foundation.

These are the only two permitted options. Using any other type of foundation will result in the EV Ultra failing its commissioning.

5.1. Foundation using the EV Ultra Mounting anchor

Assemble the EV Ultra Mounting anchor

The Smappee EV Ultra is designed to be installed at ground level using the supplied anchor.

	NOTE Only top and bottom of the anchor are specified. There is no specified front or back on the EV Ultra Mounting anchor.

To guarantee compact transportation, the anchor is supplied in a kit and needs assembling.

Follow these instructions to assemble the different parts.

1. Disassemble the anchor kit and separate each part.

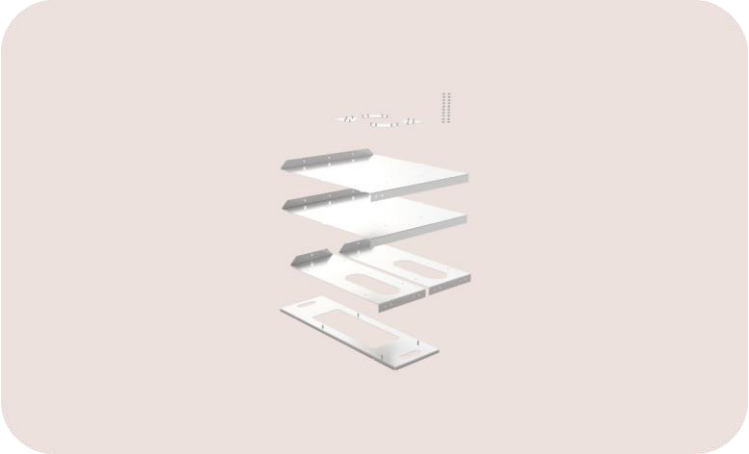

Image 4: Parts of the EV Ultra Mounting anchor kit

2. Assemble the plates to the anchor.

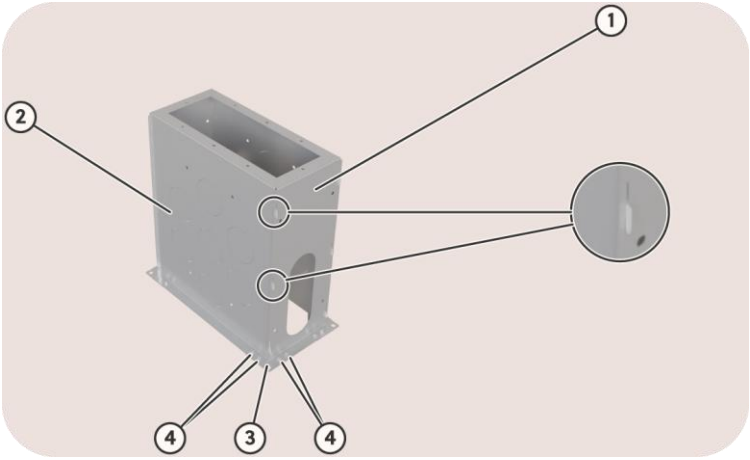

Image 5: View on the anchor assembly

ID	Description	More information
1	Small side plate	The left and right plate are the same and have slotted holes.
2	Wide side plate	The front and rear plate are the same and have hooks to slide in the slotted holes.
3	Bottom plates	These four plates have a bolted connection to the side plates.
4	Fasteners	Tighten the bolted connection manually during this assembly step.

3. Put the dummy plate on top of the anchor.
   The six studs at the bottom of the dummy plate each fit into a hole in the anchor.

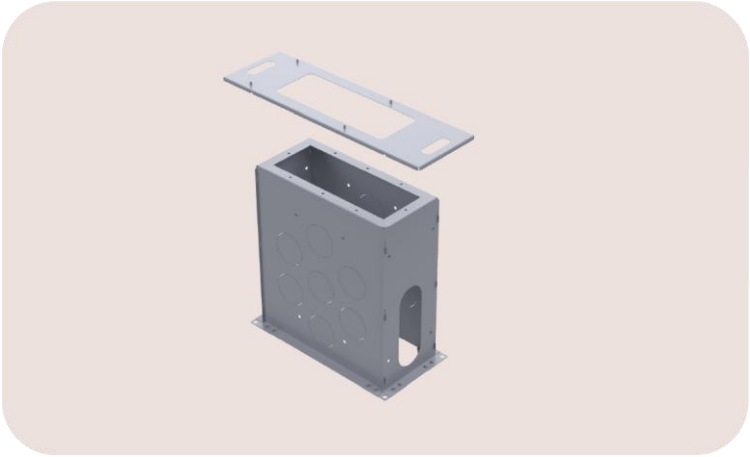

Image 6: View on the dummy plate

4. Tighten the fasteneners for the four bottom plates.

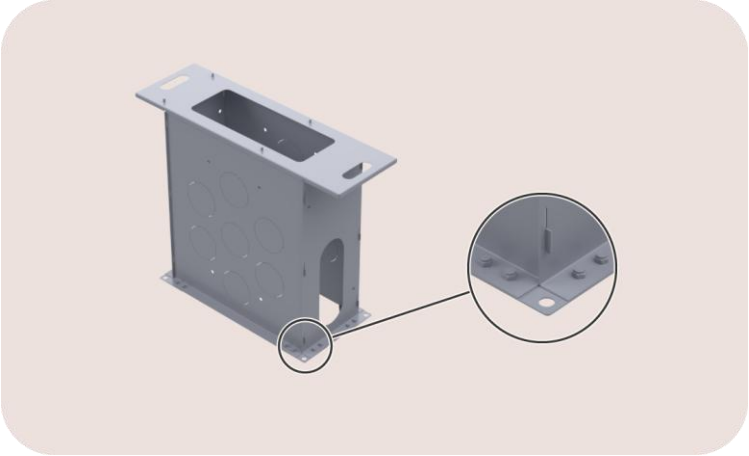

Image 7: View on the fasteners

5. If necessary, remove the round cut-outs.
   This can be useful for better fixation of the anchor and for connections to other EV chargers.

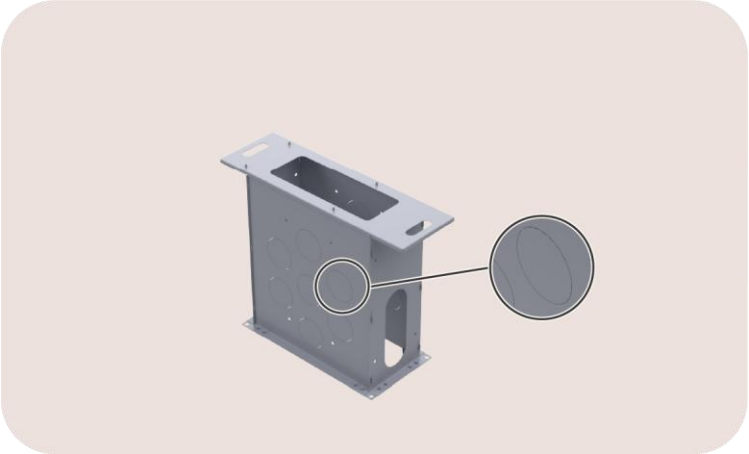

Image 8: View on the cut-outs

As a result, the anchor is ready for installation.

Install the EV Ultra Mounting anchor

NOTE

- To keep the dimensions of the EV Ultra during the installation of the anchor, there is a dummy plate attached to the top of the anchor. The anchor itself is symmetrical, or in other words, you can select which longest side will be the front.
- When dimensioning the foundation, it is advisable to carry out a static load capacity analysis according to the relevant standards.

A stable and level ground needs to be prepared in advance. We advise a levelled concrete foundation at ground level minus the height of the anchor (705 mm).

To correctly install the EV Ultra Mounting anchor:

1. Make a foundation hole that is large enough to accommodate the anchor.
2. Flatten the bottom of the foundation hole by creating a foundation layer made of a dry mixture of sand and cement.
   The minimum dimensions of this foundation layer are 450 mm by 750 mm. This is a bit larger than the dimensions of the anchor, to make sure a stable foundation is created.
3. Reinforce the corners of the foundation layer by placing concrete blocks on the foundation layer at the points where the corners of the anchor will be.
   Make sure the concrete blocks are level in both directions. If not, adjust until level.
4. Place the EV Ultra Mounting anchor on the concrete blocks.
   If needed, the anchor can be fixed to the concrete blocks by screwing a bolt in each corner of the anchor (hole diameter ⌀16 mm).

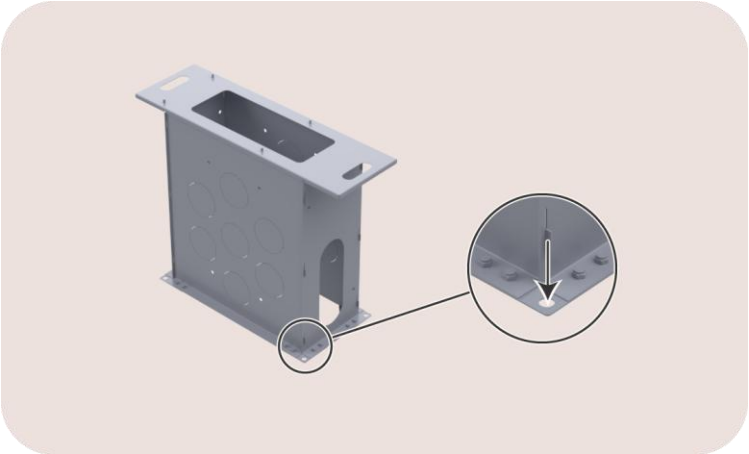

Image 9: View on the anchor fixation

5. Route all necessary cables through the anchor. The final location of all cables may already be taken into account here (see picture below).

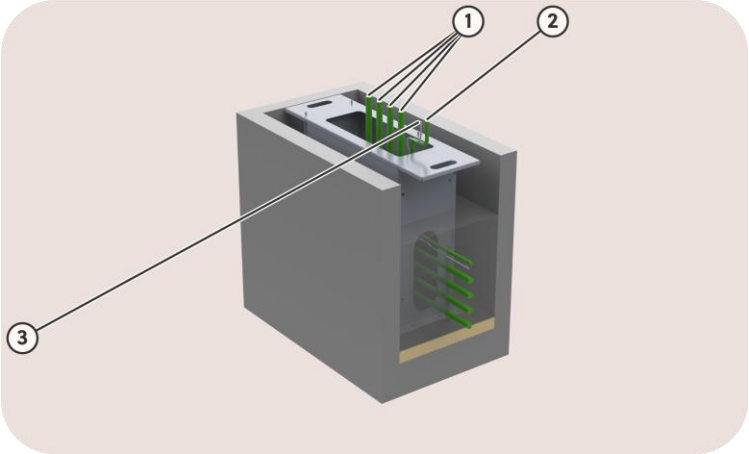

Image 10: View on the cables

ID	Description	More information
1	Main power supply cables	For the three phases (L1, L2, L3) and a protective earth (PE) to the inverters. They will be connected at the rear of the EV Ultra, refer to page 27.
2	Auxiliary power supply cable	For the internal electronics of the EV Ultra
3	Ethernet cable	For internet connectivity of the EV Ultra

6. Shorten the main power supply cables to the correct length using a cable cutter. Attach a cable lug over the four shortened cables. Use cable lugs M10 with a maximum width of A = 35 mm.

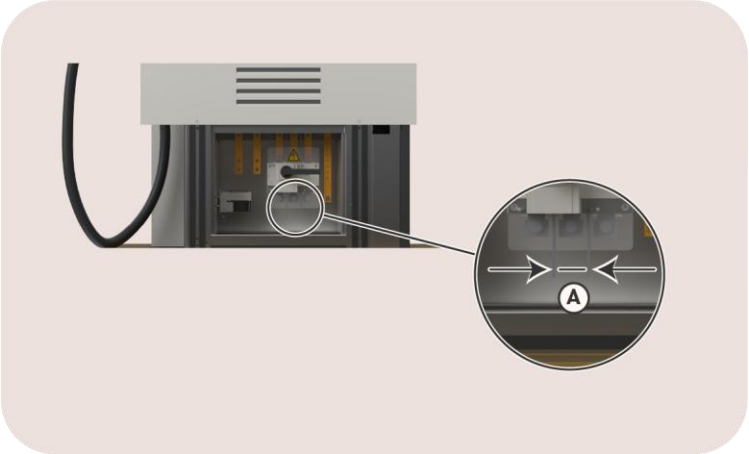

Image 11: View on the connection point of the power supply cables

7. Fill the foundation hole around the anchor (A) with concrete (C).
   It is normal for some excess concrete to pour into the holes. Use this excess to further fix the anchor to the foundation.

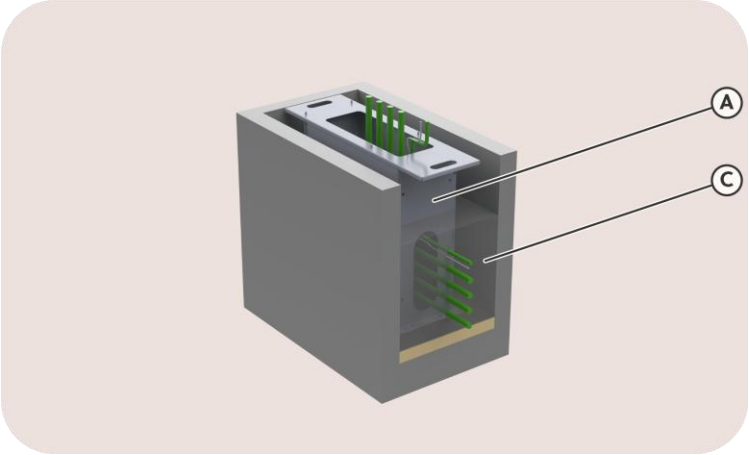

Image 12: View on the installed anchor

Wait for the concrete to cure before going to the Installation and configuration.

5.2. Foundation using the EV Ultra Concrete foundation

1. Excavate the installation pit
   Dig a hole large enough to accommodate the concrete foundation.
   The foundation dimensions are 920 mm (L) × 390 mm (W) × 700 mm (H).
   We recommend making the opening 10–15 cm larger on all sides to allow for proper positioning.

2. Prepare a stabilized base layer
   Add a layer of stabilized sand to create a flat, level surface.
   Depending on soil conditions, a thickness of 10–15 cm will typically be sufficient.

3. Lower the concrete foundation into place
   Use a crane, as the unit weighs 260 kg.
   The foundation includes two M16 lifting sleeves, compatible with M16 lifting eye bolts, ensuring safe and efficient handling.

4. Level the foundation
   Confirm that the foundation is level on all axes.
   Proper leveling is crucial to ensure long-term structural stability and alignment of the charging station..

5. Route all required cables
   Feed all necessary cables through the openings in the foundation (see picture below).
   The final cable positions can already be pre-aligned at this stage.

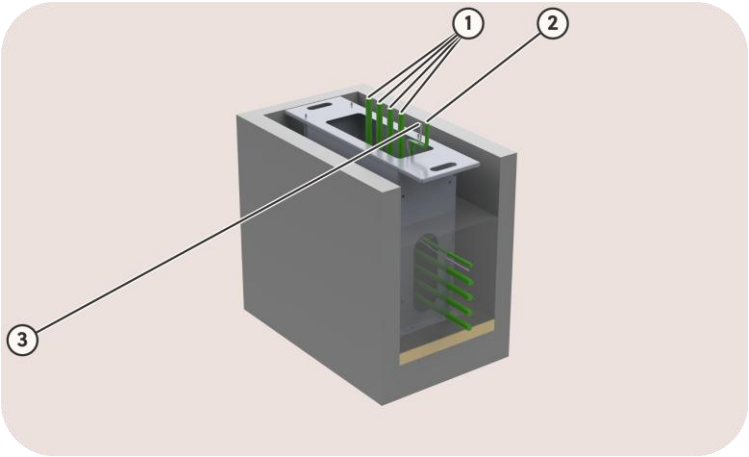

Image 13: View on the cables

ID	Description	More information
1	Main power supply cables	For the three phases (L1, L2, L3) and a protective earth (PE) to the inverters. They will be connected at the rear of the EV Ultra, refer to page 27.
2	Auxiliary power supply cable	For the internal electronics of the EV Ultra
3	Ethernet cable	For internet connectivity of the EV Ultra

6. Backfill around the foundation
   Fill the excavated space with stabilized sand up to 5 cm below ground level.
   Compact the material thoroughly to ensure a stable, integrated structure.
   The final 5 cm of the pit is filled with earth to restore the natural ground level.

7. Prepare and terminate the power cables
   Trim the main power supply cables to the correct length using an appropriate cable cutter.
   Fit M10 cable lugs (maximum width A = 35 mm) onto each of the four trimmed cables.

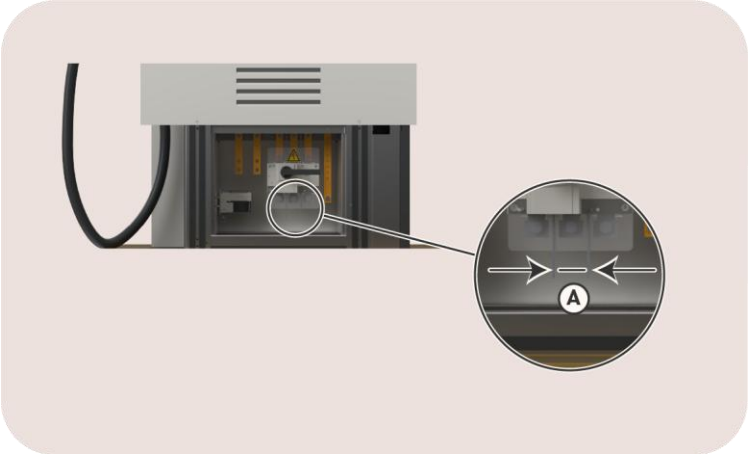

Image 14: View on the connection point of the power supply cables

Proceed to the Installation and configuration step of this installation guide.

6. Installation and configuration

	CAUTION The installation must be carried out by a qualified professional who has read this manual and works in compliance with IEC 60364 standards. Neglecting this may lead to severe injuries or hazardous situations while working with electricity.
	CAUTION The electric system must be entirely disconnected from every power source prior to performing installation or maintenance work. Make sure it is not possible to connect the electric current during installation. Put up caution tape and warning signs to mark the work areas. Make sure no unauthorised people can enter the work areas.
	CAUTION Hazardous electrical voltages are present in the EV Ultra (up to 1000 V).
	CAUTION The charging station contains electric components that may still contain electrical charge after being disconnected. Wait at least 10 seconds after disconnection before commencing work.
	CAUTION Adaptors or conversion adaptors and cord extension sets are not allowed to be used.
	CAUTION The EV Ultra contains components and circuits boards sensitive to electrostatic discharge. Sufficient electrostatic discharge measures should be taken to protect the components during installation and maintenance.
	CAUTION Components of the EV Ultra can be very heavy, for example the inverters.
	CAUTION Take care that components don’t squeeze a human body or body part while assembling or disassembling.

This procedure describes the required steps for the physical installation of the EV Ultra.

1. Prepare the EV Ultra for lifting (page 23)
2. Position the EV Ultra (page 25)
3. Attach the EV Ultra (page 26)
4. Connect the main power supply (page 27)
5. Connect the auxiliary power supply (page 28)
6. Connect the EV Ultra to the internet (page 29)
7. Switch on the power supply (page 31)
8. Complete the installation (page 31)
9. Configure the EV Ultra with the Smappee App (page 32)

6.1. Prepare the EV Ultra for lifting

The EV Ultra is delivered standing on a euro pallet. To position the EV Ultra, do the following:

1. Remove the dummy plate from the top of the anchor.
   This dummy plate was used during the installation of the anchor, but is not longer necessary.
2. Remove the cardboard packaging.
3. Attach the lifting lifting eye bolts e bolts on the top of the EV Ultra.

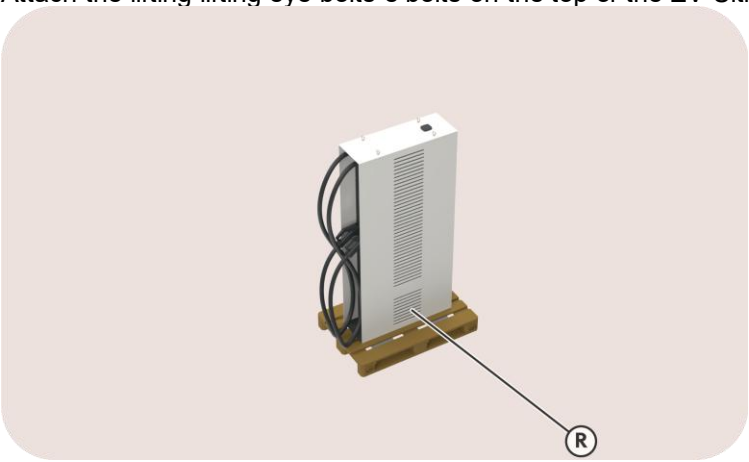

Image 15: View on the lifting eye bolts

   The lifting eye bolts are in the included accessory box.
   The four M10 bolts that hold the top plate, can be removed.
   Make sure you keep the bolts and rubber washers.
4. Put a little tension on the lifting loops, to prevent the EV Ultra from falling over.
   Use a suitable crane and lifting loops with carabiners.

5. Remove the rear plate (R).

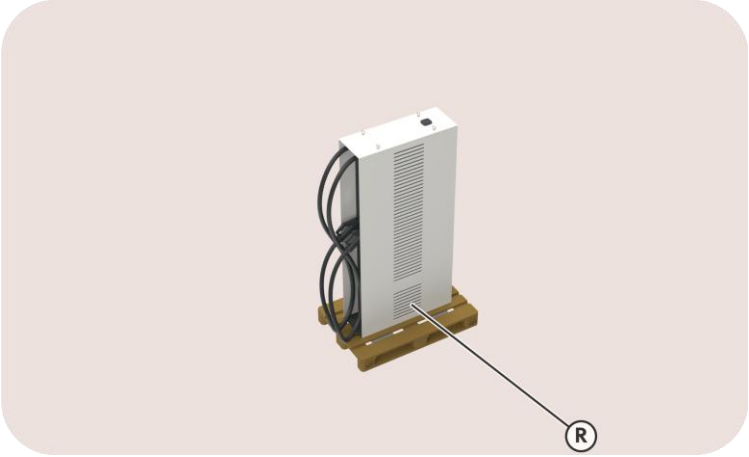

Image 16: View on the rear plate

6. The rear side of the EV Ultra is the side without the Smappee logo.
   Put the plates in a safe location where they cannot be scratched or damaged.
   Remove the protective plate (B).

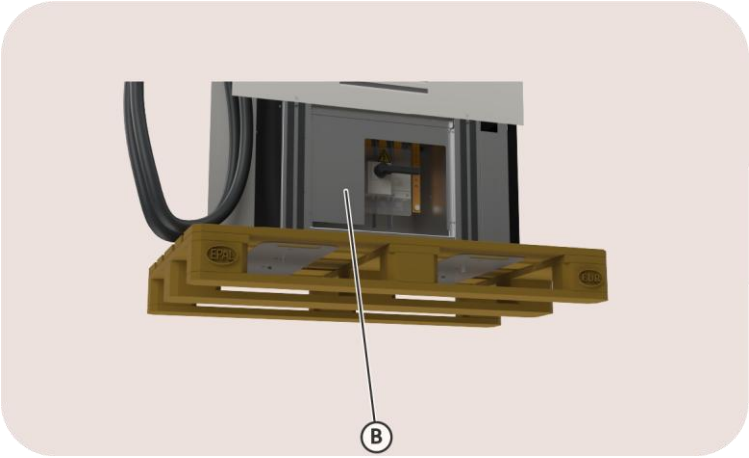

Image 17: View on the protective plate

7. Remove the plates (P) that hold the EV Ultra on the euro pallet.
   The bolted connection can be loosened with a 17 mm key for the hex nut at the top and a 10 mm key for the hexagon socket screw at the bottom.

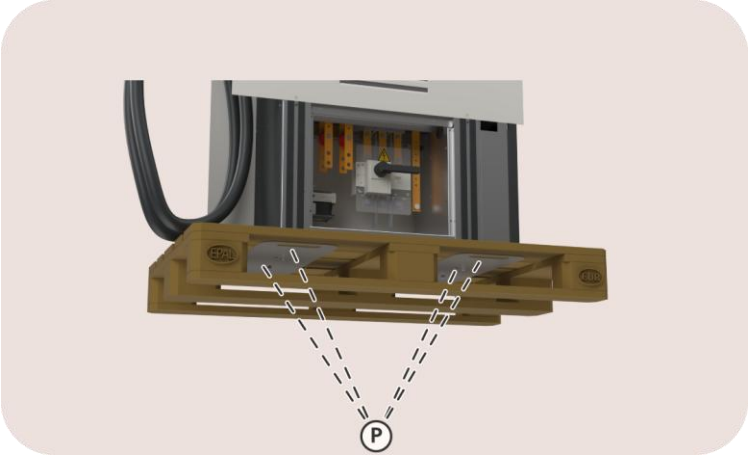

Image 18: View on the bottom

6.2. Position the EV Ultra

Instructions

1. Lift the EV Ultra with the crane.
2. Put a bolt (M8 x 40) in each threaded hole.
   These bolts will be used to align the EV Ultra with the anchor.

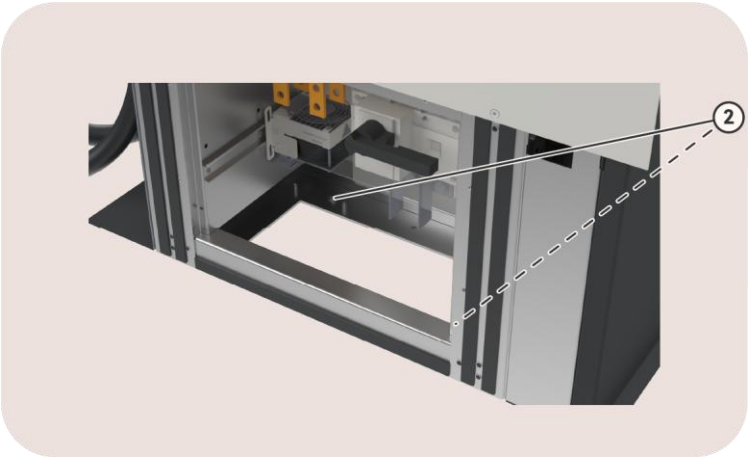

Image 19: View on the alignment bolts

3. Move the EV Ultra with the crane above the anchor.

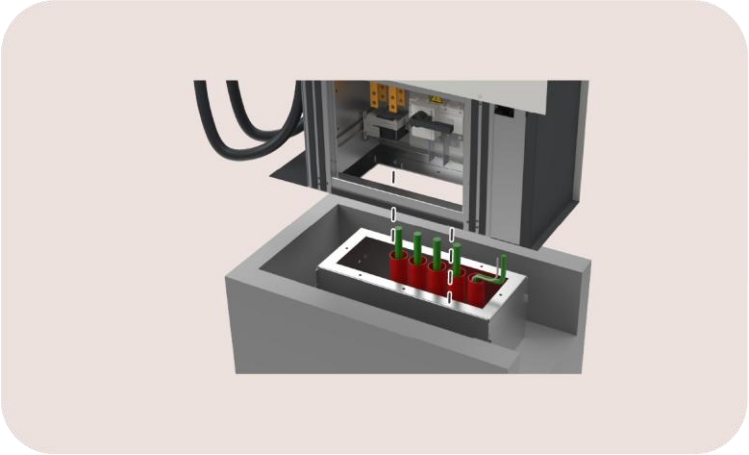

Image 20: View on the position

4. Make sure that all cables go through the opening, while keeping the final position.
5. Make sure no cable is crushed during the lowering of the EV Ultra.

6.3. Attach the EV Ultra

Instructions

1. Put the other fasteners to connect the EV Ultra to the anchor.

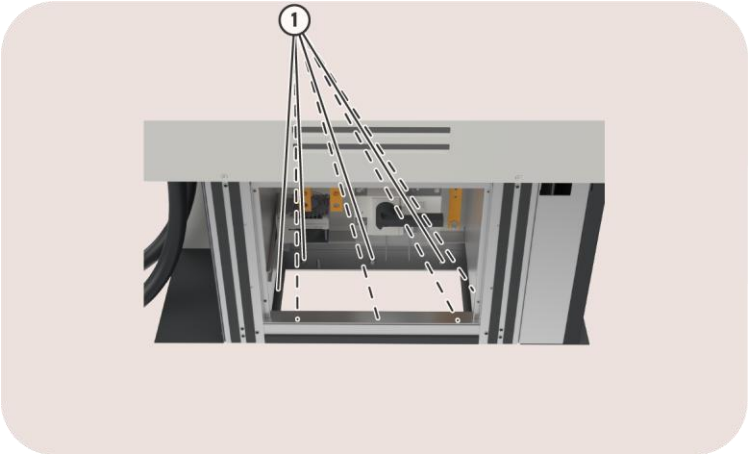

Image 21: View on the attachment points

2. Tighten the fasteners manually to prevent the EV Ultra from falling over.
3. Remove the tension from the lifting loops.
4. Tighten the fasteners to a torque of 20 Nm.
5. Remove the lifting loops.
6. Replace the lifting eye bolts on top of the EV Ultra again with the four originally fitted bolts. Make sure a washer of rubber is still fitted around each bolt to prevent water seeping into the charging station.
   Do not use more than 8 Nm of torque.

6.4. Connect the main power supply

Context

The power supply to the inverters is used for the DC charging.

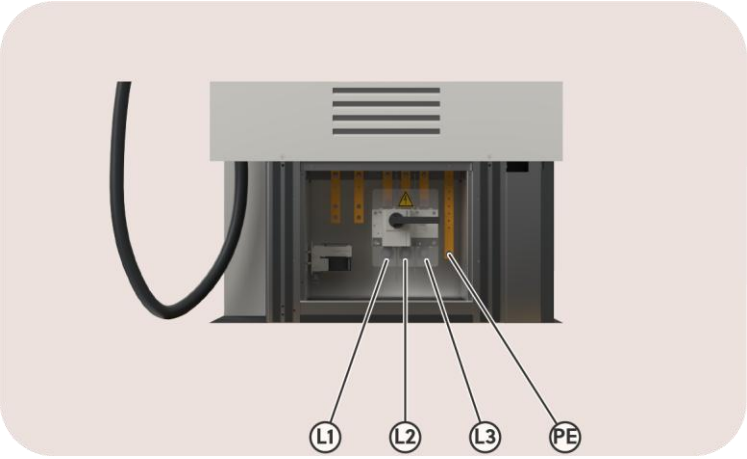

Image 22: View on the power supply to the inverters

Instructions

Proceed as follows.

1. Connect the three phase cables to the load break switch and the PE cable to the left bus bar.
2. Tighten the bolted connections to a torque of 20 Nm.
3. Attach the plastic cover to the load break switch.

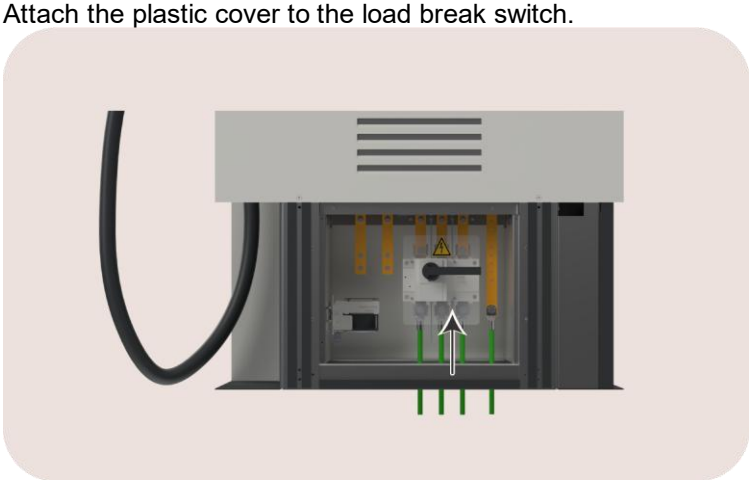

Image 23: View on the plastic cover

6.5. Connect the auxiliary power supply

Context

The auxiliary power supply is used for power supply to the AC-parts of the charging station that doesn't need high power for DC-charging.

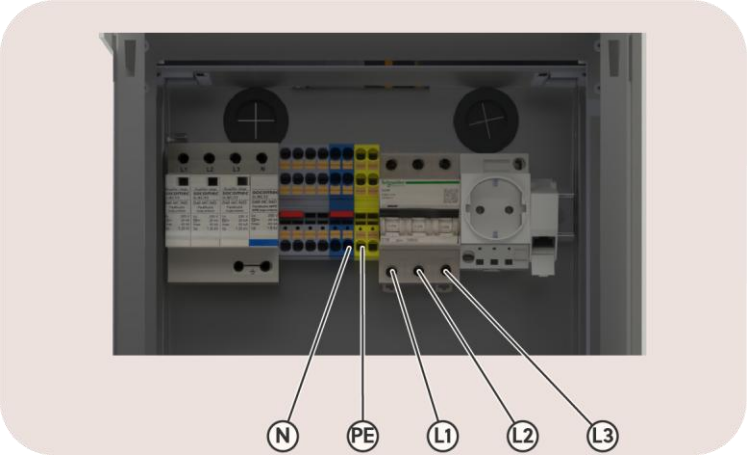

Image 24: View on the auxiliary power supply

ID	Description	More information
L1	Brown conductor	The three phases go into the internal 3P 10 A circuit breaker.
L2	Black conductor	
L3	Grey conductor	
N	Blue conductor	The neutral (N) and protective earth (PE) conductor go into the terminal blocks.
PE	Green/yellow conductor	

Instructions

Proceed as follows.

1. Remove the side plate (S).

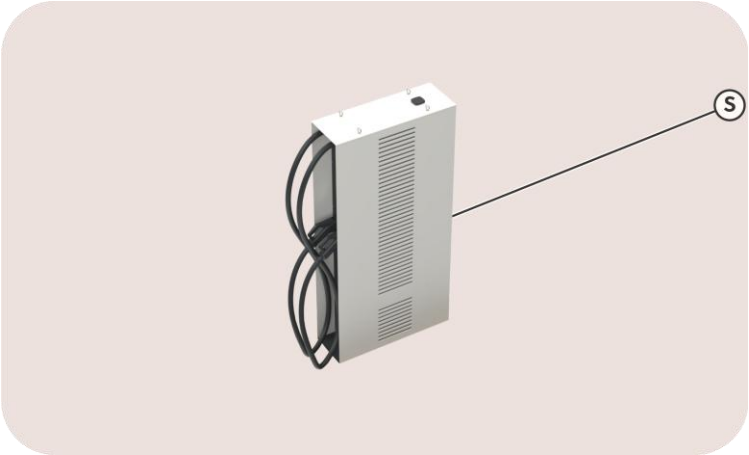

Image 25: View on the side plate

2. Shorten the 5G2.5 mm² cable to the necessary length.
3. Put each conductor in the corresponding connection opening.
   Make sure each conductor goes to the indicated connection opening.

6.6. Connect the EV Ultra to the internet

Context

⚠	CAUTION Risk of electric shock. Make sure no tools are in the charging station and people stand free from the charging station.

Instructions

Proceed as follows.

1. Put the Ethernet cable in the open port.

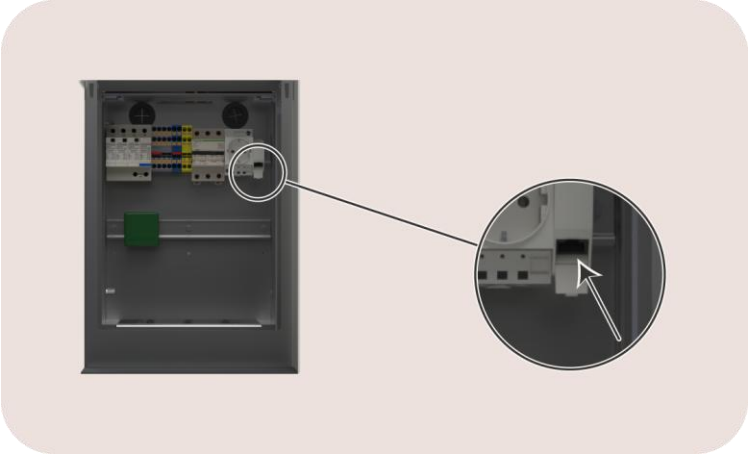

Image 26: View on the left side

2. Make sure that the circuit breaker is set to the on position.
3. Switch on the power supply to the auxiliary power supply cable.
4. Check the status of the components after approximately 30 seconds.

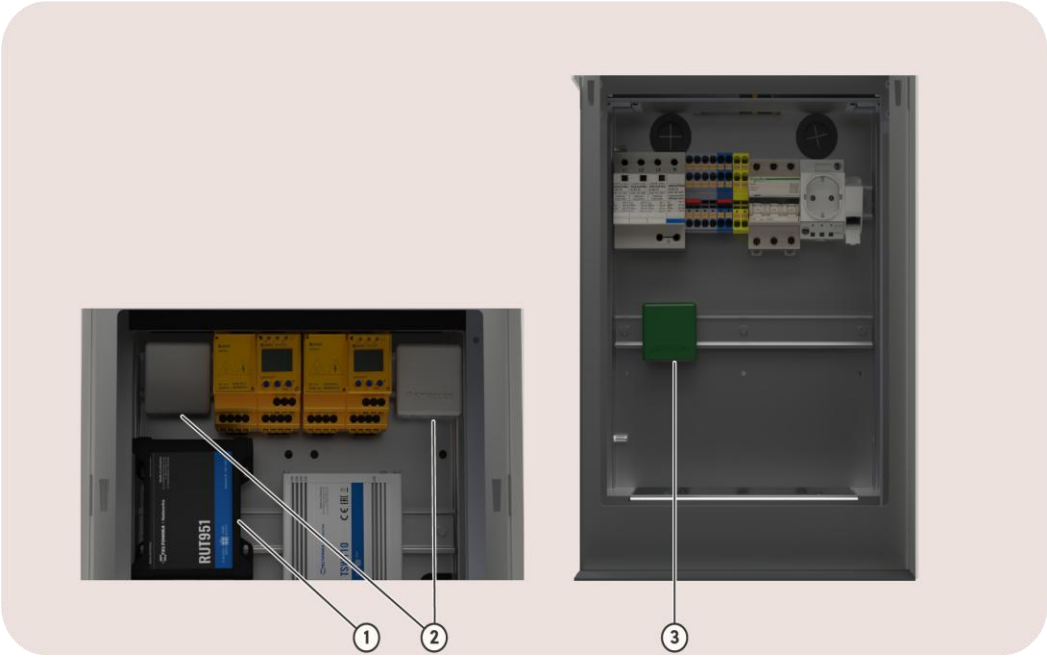

Image 27: View on the left side and right side

ID	Description	More information
1	Router	Signal strength indicator A router creates a small, private network within the EV Ultra to provide network connectivity for all components. This private network is created within the subnet 192.168.37.0. There is a 4G connection configured as backup, in case of failure of the wired internet connection.
2	Smappee Connect	LED is lighting up For more information, refer to the annex Status of the Smappee Connect (page 37).
3	Smappee Power Box	LED is flashing once every 3 seconds.

6.7. Switch on the power supply

Context

⚠	CAUTION Risk of electric shock. Make sure no tools are in the charging station and people stand free from the charging station.

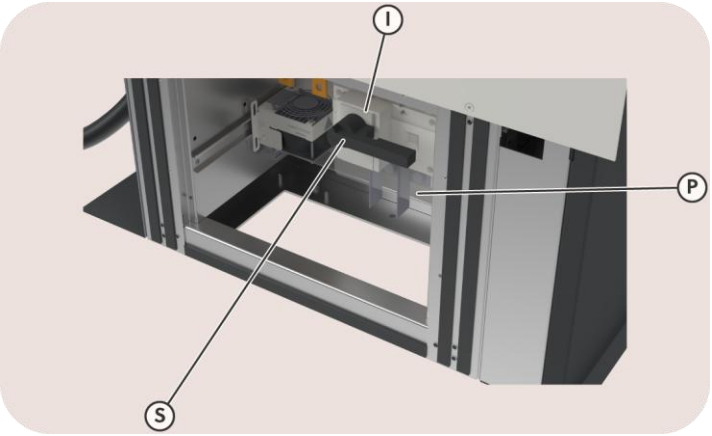

Image 28: View on the load break switch

Instructions

Proceed as follows.

1. Put the protective plate (B) back.
2. Make sure that the load break switch (S) is set to the on (I) position.
3. Switch on the power supply to the power supply cable.
4. Complete the installation.

6.8. Complete the installation

Context

⚠	CAUTION Risk of electric shock. Switch off electrical power supply to your charging station before installation or maintenance work. Wait 1 minute after switching off the power supply.

Instructions

Proceed as follows.

1. Fill the opening between the anchor and charging station with an airtight material such as polyurethane foam.
   This is to prevent the overpressure from the cooling fans escaping into the ground, to stop small animals from entering the charging station via the ground and to avoid moisture problems.
2. Put the rear plate back.
3. Configure the EV Ultra with the Smappee App (page 32).
4. Put the side plates back.

6.9. Configure the EV Ultra with the Smappee App

Prerequisites

This procedure is done with the Smappee App. You can download this mobile app from the Apple App Store for iOS or the Google Play Store for Android phones.

Image 29: Download the Smappee App

Instructions

1. For the installation of the first Smappee product, go to **Home** > **+** button > **I want to install a Smappee charging station**.
2. For the addition of an EV Ultra to an existing Smappee location, go to **Settings** and then:
   - For a first installation to this location: **Install a Smappee EV Line charging station**
   - For an additional charging station at this location: **Your charging stations** > **+** button
3. Follow the steps shown in the Smappee App.
4. Put the side plate back, refer to Complete the installation (page 31).

Post-requisites

The **Name** and **Maximum power for each connector** of your charging station can be adjusted in the Smappee App or the Smappee Dashboard.

The EV Ultra must be commissioned by Smappee before the first use.

For more information, refer to this help center article and the EV Ultra training on Smappee Academy.

7. EV Ultra Commissioning

Context

The EV Ultra must be commissioned by Smappee prior to its first use.

Instructions

Proceed as follows.

1. Schedule the commissioning by emailing commissioning@smappee.com at least two weeks before the installation date.
2. You will receive an editable PDF of the EV Ultra Installation & Commissioning Checklist.
3. Complete Part A of the checklist with basic installation details before the commissioning appointment.
4. During the commissioning appointment, the commissioner will conduct all necessary checks and complete Part B of the checklist.
5. Once completed, the checklist should be signed by both the installer and the commissioner.

For more information, refer to this help center article and the EV Ultra training on Smappee Academy.

Post-requisites

To ensure the warranty remains valid, scheduled maintenance of the EV charger is required starting from the second year after installation.

8. Maintenance

For a safe and regular operation of the EV Ultra, regular maintenance or control is required. Refer to the table below for the intended maintenance work and interval.

All points in the table are considered mandatory and must be carried out by a certified technician.

For a list of spare part articles, refer to the spare part list in this manual.

Before starting maintenance activities, consider all safety precautions as listed in:

- Safety instructions (page 5)
- Installation and configuration (page 22)

8.1. Maintenance schedule

- Observe the maintenance schedule in the table below.
- Clean the outside only with a dry, clean cloth.
- Do not use abrasive agents or solvents.
- May not be carried out during rain or if air humidity exceeds 95%.

WARNING

Fully read and follow the safety instructions below before you install, service or use your EV Ultra. Incorrect installation, repairs or modifications can result in danger to the user and may void the warranty and liability.

NOTE

At the end of its service life, the product must be disposed of and recycled as electronic equipment, in full compliance with all applicable local laws and regulations governing electronic waste.

Maintenance task	**Interval**	**More information**
Check the compliance.	Every maintenance activity	Refer to local regulations and standards.
Check the visual state.	Every maintenance activity	If necessary, replace worn or damaged parts.
Replace the charging cable.	After 20,000 charging cycles	
Do a functional test of the load break switch.	Every maintenance activity	Set the load breaker switch to off. Check that there is no power supplied to the inverters. If necessary, replace the load breaker switch.
Only applicable to serial numbers less than 6304: do a visual inspection of the overvoltage fuse to each inverter.	Yearly	Stop the power supply before you open the charging station fuse holder. Do a visual inspection of each fuse. If necessary, replace the fuse.

Maintenance task	Interval	More information
Do a functional test of the overvoltage circuit breaker of the auxiliary power supply.	Yearly	Set the switch to off. Check that there is no power supplied. If necessary, replace the overvoltage circuit breaker. See matching article number in spare part list.
Verify the protective measures.	Yearly	With the charging station switched off, check the resistance between the ground and all externally accessible parts. This can be housing, screws, and other parts.
Check the tightening torque of bolts.	Yearly	With stopped power supply to the charging station, do a visual inspection of the bolted connections of the load break switch bolts (6x) and the bolted connections of the charging cable(s). If a bolted connection has come loose, retighten it to the correct torque: • Bolted connections load break switch: 20 Nm minimum and 26 Nm maximum • Bolted connection(s) charging cable to bus bar: 36.4 Nm • Bolted connection(s) charging cable to LEM meter: 36.4 Nm
Check for cleanliness and condensation	Yearly	Stop the power supply before you open the charging station. If necessary, clean with a dry, clean cloth. Do not use abrasive agents or solvents. If necessary, replace the sealant of the openings. Refer to page 31.
Ventilation filters	Yearly	

8.2. Inverter fault codes

Fault code	Analysis	Solution
E02	Fan blocked	Remove the object that prevents the fan.
	Air duct blocked	Remove the object that blocks air duct or clear dust.
E03	AC input voltage is not in the normal range	Ensure AC input voltage is in the normal range
E05	Module positive and negative pole short circuit	Power off the control module, check whether the positive and negative poles on the output circuit are short circuited, and reboot after confirming that there is no short circuit. If alarm persists, replace control module.
E06	Module output voltage exceeds the set output overvoltage value	Power off the control module, check whether the module output voltage has been changed, and check that the module output voltage is less than the set module output overvoltage value. And then, reboot after pulling out the control module, if alarm persists, replace control module.
E07	Address conflict	If the error persists, contact support.
E09	The difference between the module current and average current is too large	Check the control module communication, check the connection of the communication cable. If the communication is good and alarm persists, replace the control module.

Annexes

Status of the Smappee Connect

This status is relevant during the configuration and use of the charging station.

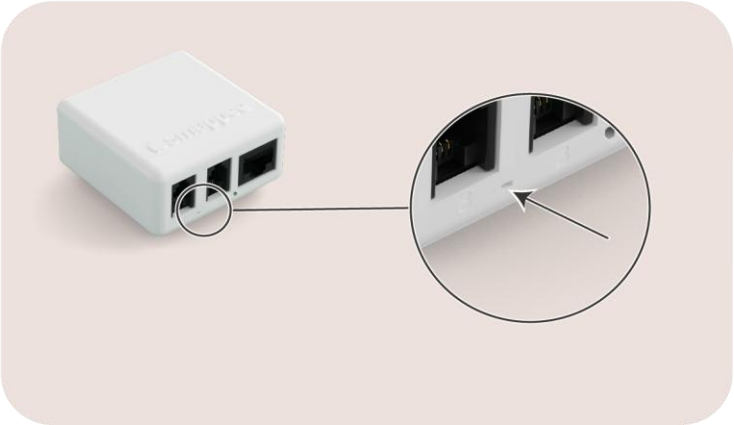

Image 30: Position of the LED on the Smappee Connect

Colour	Status	Meaning	More information
	Blue continuous	Starting up	The Connect is starting up. If this takes more than 30 seconds, please contact support.
	Blue flashing	Ready for connecting	The Connect is ready to be connected to the network.
	Green continuous	Connecting	The Connect is connecting to the internet and must become *Green breathing*. If this takes more than 2 minutes, please contact support.
	Green breathing	All good	The Connect operates correctly.
	Red flashing	No connection	The Connect has no connection to the internet during start-up. Find the cause of the connection issue or contact support.

Performance graphs EV Ultra Dual

The following graph shows the DC output power for a charging point, related to the AC input line voltage.

No DC output power is produced if the AC input voltage is below 285 V or above 475 V. Small variances in the normal AC input voltage (for example between 400 V and 410 V) will not cause any change in de DC output power.

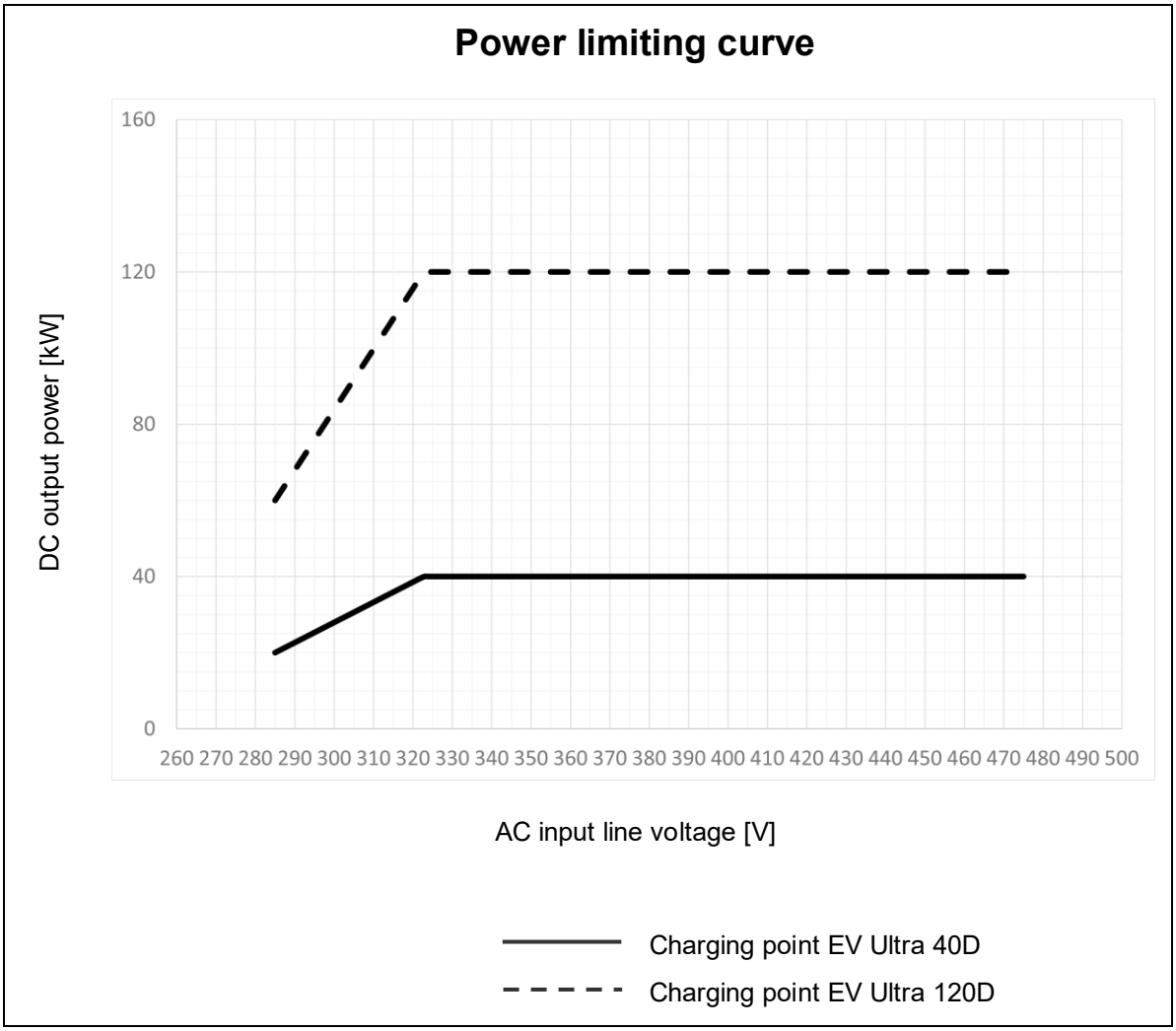

The following graph shows the maximum output current for a charging point as a function of the output voltage. The output voltage is determined by the vehicle's battery, where most vehicles require voltages of approximately 400 V or 800 V. The Smappee EV Ultra can provide voltages between 100 V and 1000 V.

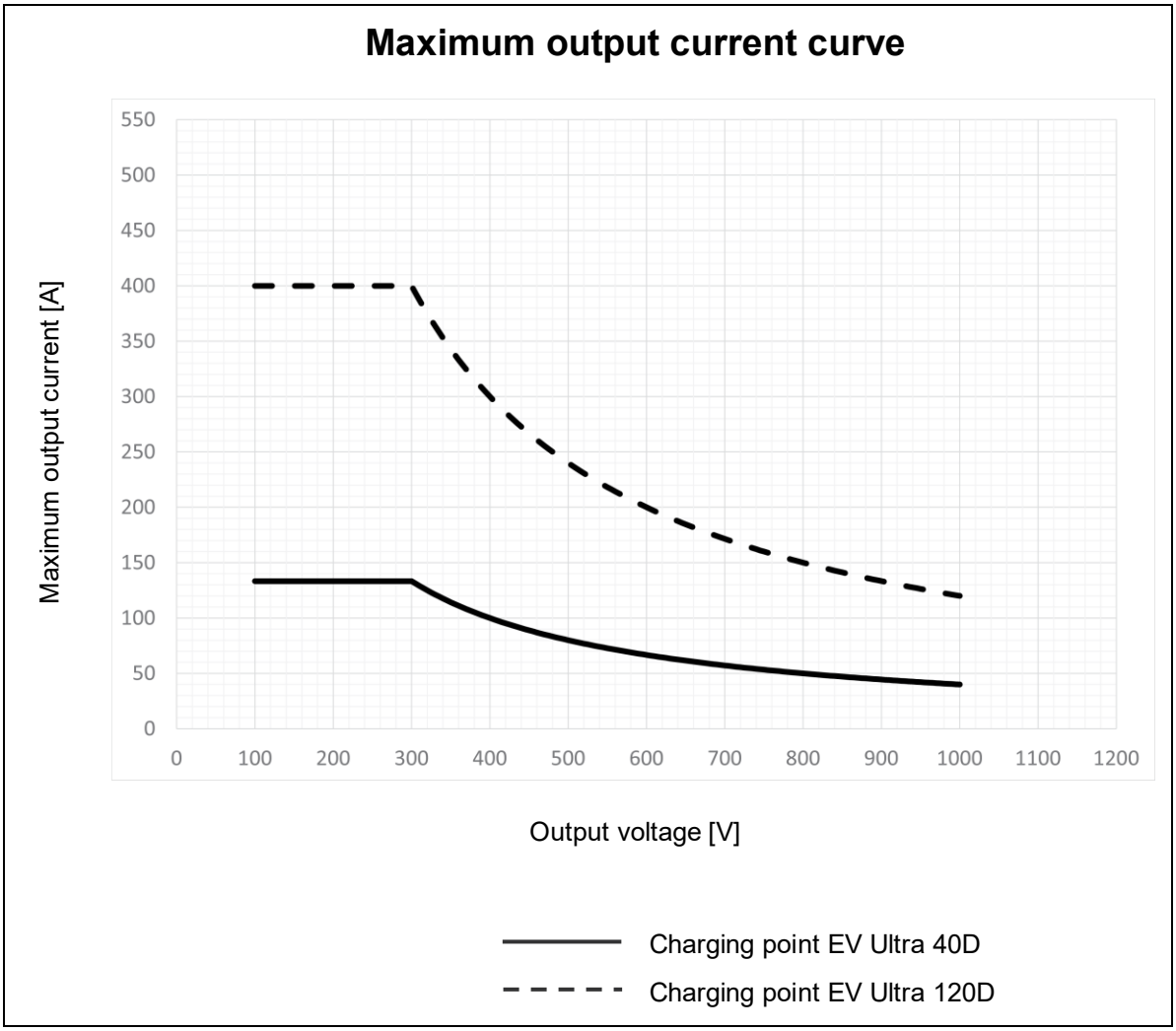

Power derating graph EV Ultra Dual

The following graph shows the decrease in power output per charging point as a function of temperature increase in the inverters of the different EV Ultra.

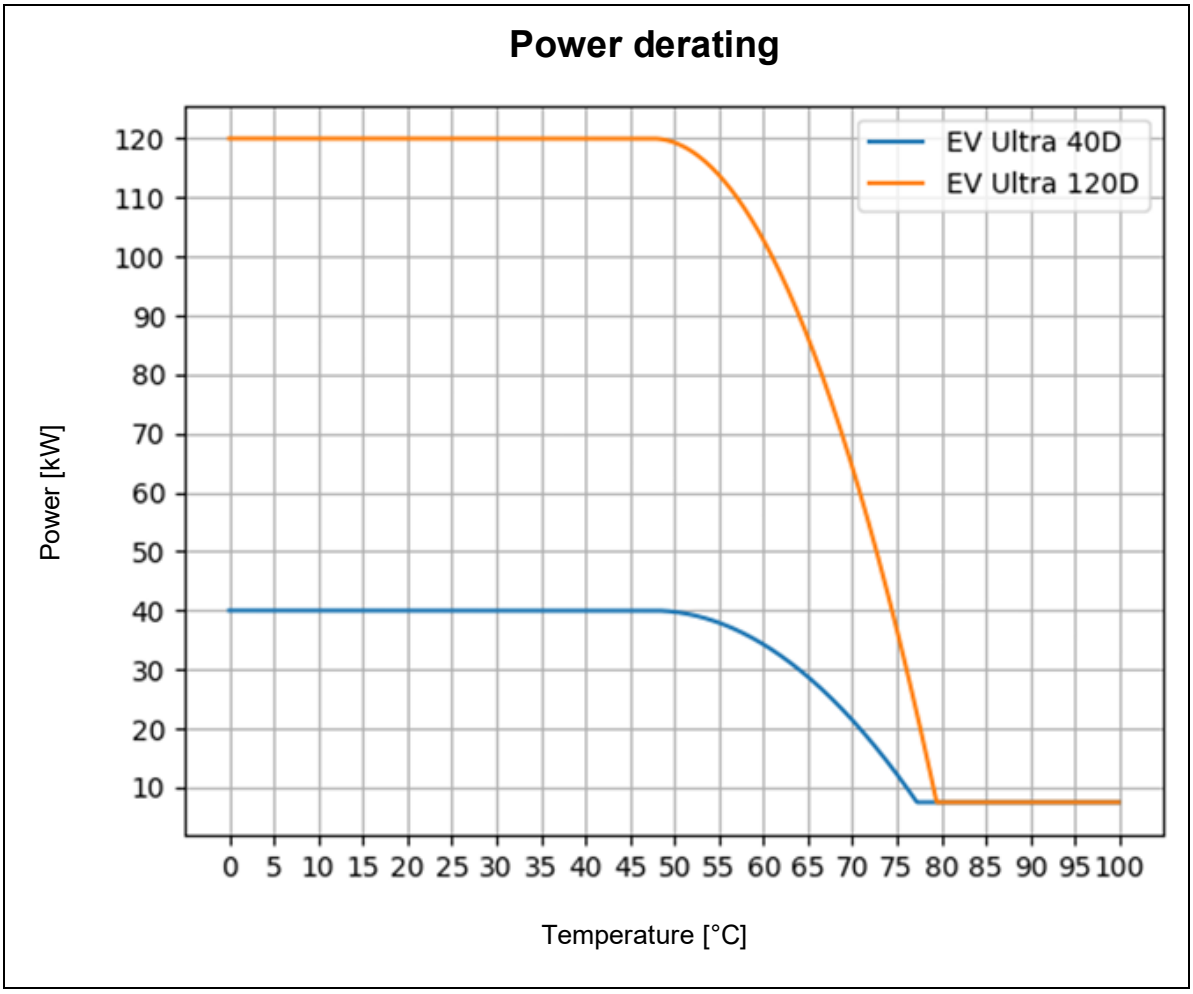

Cable management system

Keep charging cables supported and organised with the Cable Management System.

It's available for 5 m and 7 m cables, in both single and double configurations, and is suitable for indoor and outdoor installations.

What's in the box

Description	Quantity
CMS	1
Lifting eye	2
Screw M10	4
Screw M6	14
Flat sealing washer	4
Bonded sealing washer	4
Cable clamp	4
Connection clips	2
Locknut M4	10 (+ 4 spare)
Screw M3	4 (+ 4 spare)
Screw M4	14 (+ 4 spare)
Pivot pin	2

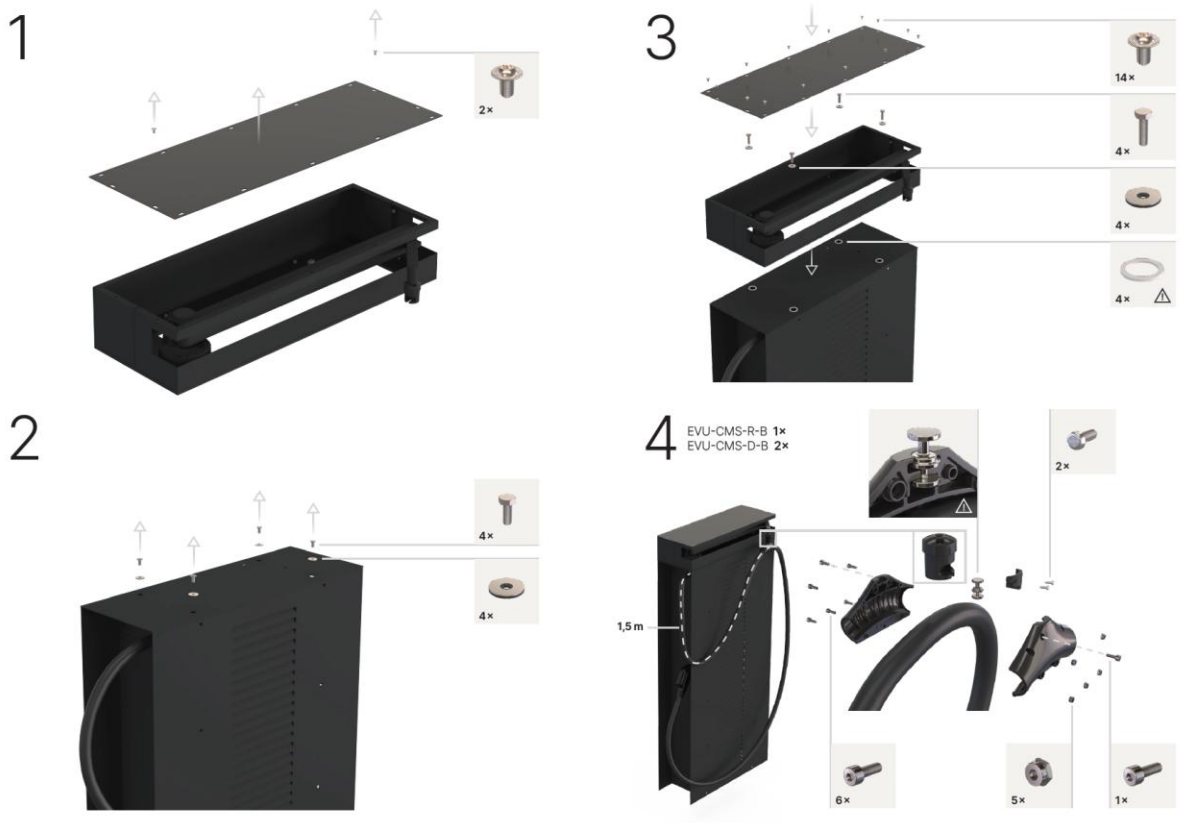

To install the Cable Management System (CMS), follow the steps below:

1. Remove the Top Plate
   Remove the top plate from the Cable Management System (CMS).
   The top plate is secured with two screws upon delivery.
2. Remove the Existing Fasteners from the EV Ultra
   Remove the bolts and washers located on top of the EV Ultra.
   These fasteners are not required for the installation of the CMS and can be discarded.
3. Install the Cable Management System
   1) Place the four flat sealing washers on top of the EV Ultra.
      These washers are essential to ensure the watertightness of the EV Ultra.
   2) Position the CMS on top of the sealing washers. If required, use the supplied lifting eyes to safely position the unit.
   3) Secure the CMS using the supplied M6 screws and bonded sealing washers.
   4) Reinstall and secure the top plate to the CMS.
4. Install the charging cables on the CMS
   1) Insert the pivot pin into the CMS arm and secure with the connection clips and the M3 screws.
   2) Attach the charging cable to the pivot pin using the cable clamps and the supplied M4 screws and nuts.
      Ensure that the cable clamps are positioned correctly relative to the pivot pin, as shown in Image.
      Clamp the cable at 1.5 m from the cable gland.

Declaration of conformity

Docusign Envelope ID: 0F828800-6E7C-4BB5-BB32-0BFB394AF4E7

EU Declaration of Conformity

Manufacturer	**Smappee NV**
Address	Evolis 104, 8530 Harelbeke, Belgium
Represented by	**Stefan Grosjean**
Function	CEO

Hereby declares, under the sole responsibility of the manufacturer, that

The product:	DC conductive charging equipment
Models:	EVU-240S-C3-x, EVU-240D-C3-x, EVU-80S-C3-x, EVU-80D-C3-x, EVUE-240S-C3-x, EVUE-240D-C3-x, EVUE-80S-C3-x, EVUE-80D-C3-x where x can be B for Black color or W for white color
First CE affixed:	2022

Complies with the requirements of the following EU Directives, provided that it is installed, maintained and used according manufacturer's instructions:

2014/53/EU The Radio Equipment Directive

2011/65/EU RoHS Directive

Standards applied:

Note: where RED is applicable to radio equipment, the LVD and EMCD do not apply, however the RED refers to the essential requirements of the LVD and EMCD

RED art 3.1.a Health and safety:
EN IEC 61851-1 2019 Electric vehicle conductive charging system - General requirements
EN IEC 62311:2020 Human exposure restrictions for electromagnetic fields (0 Hz to 300 GHz)

RED art 3.1.b Electromagnetic Compatibility:
EN IEC 61851-21-2:2018 EMC requirements for off board electric vehicle charging systems
EN ETSI 301 489-1: 2019 EMC for radio equipment & services: common technical requirements
EN ETSI 301 489-3: 2023 EMC specific conditions for Short Range Devices (SRD)
EN ETSI 301 489-52: 2024 EMC for Cellular Communication User Equipment

RED art 3.2 Efficient use of Radio Spectrum:
EN ETSI 300 220-1: 2017 Short Range Devices - 25 MHz to 1000 MHz: Technical characteristics
ETSI EN 301 908-13 V13.2.1 IMT cellular networks - Evolved Universal Terrestrial Radio Access

RED art 3.3.e Network protection
EN 18031-1: 2024 Common security requirements for Internet connected radio equipment

RED art 3.3.f Personal data protection
EN 18031-2: 2024 Common security requirements for radio equipment processing data

RED art 3.3.g Protection from fraud
EN 18031-3: 2024 Common security requirements for Internet connected radio equipment processing virtual money or monetary value

Authorized signatory 23-okt-2025

Stefan Grosjean, CEO

Ondertekend door:
Grosjean Stefan
A7AEF5470392469...

EU DoC EV ULTRA v03

smappee

Docusign Envelope ID: 17D1C2FD-D2CC-8969-827C-A08F6EE16F20

EU Declaration of Incorporation

Manufacturer	**Smappee NV**
Address	Evolis 104, 8530 Harelbeke, Belgium
Represented by	**Stefan Grosjean**
Function	CEO

Hereby declares, under the sole responsibility of the manufacturer, that

The assembly:	EV ULTRA Cable Management System
Model:	EV ULTRA CMS

Complies with the requirements of the **EU regulation EU 2023/1230** (as of 20 January 2027) **and/or Directive 2006/42/EC** (until 20 January 2027), provided that it is installed, maintained and used according to manufacturer's instructions.

Compliance is demonstrated through **risk assessment and test** according to the applicable

ESSENTIAL HEALTH AND SAFETY REQUIREMENTS RELATING TO THE DESIGN AND CONSTRUCTION OF MACHINERY OR RELATED PRODUCTS

and

SUPPLEMENTARY ESSENTIAL HEALTH AND SAFETY REQUIREMENTS TO OFFSET RISKS DUE TO LIFTING OPERATIONS

of both EU regulation EU 2023/1230 and Directive 2006/42/EC

Authorized signatory,

Stefan Grosjean, CEO

Ondertekend door:
A7AEF5470392469...

DoC nr : EU DoI CMS v00

smappee

Display information

Image	Explanation
	Default welcome message. Image is configurable using the Smappee Dashboard. 16-Bit image should be maximum 320 x 240 pixels (or smaller).
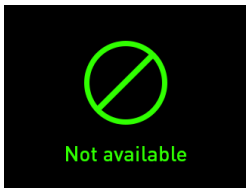	Something is wrong or the charging station has been disabled. Enable the charging station with the Smappee App or contact your installer.
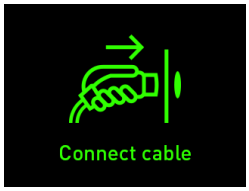	Home screen when charging station is available. To start a charging session, first plug the EV Ultra charging cable into the vehicle.
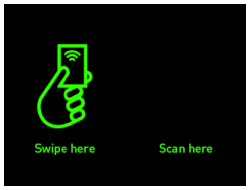	Message after plugging in the charging cable when charging station uses authenticated charging and is set public. There are two options to start a charging session at the EV Ultra: The charging session is started by swiping your RFID card at the display or the charging session is started by scanning the QR code on the display.
	Message after plugging in the charging cable when charging station uses authenticated charging and is not set public. The charging session is started by swiping your RFID card at the display.
	Message received when charging station declined your RFID card. Contact the supplier of the RFID card.
	Message when the charging session is complete.

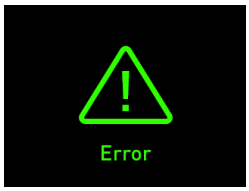	Something went wrong. Check Charging station diagnostics in the Smappee Dashboard or contact your installer.
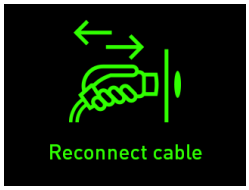	The charging cable is not properly plugged into the vehicle. Reconnect the cable.

	NOTE You can add additional images through the Smappee Dashboard. All images must be 16-bit and no larger than 320 × 240 pixels.

Spare parts list

Article no.	EAN	Description
i1-GW-3	5425036931442	Smappee Connect
i1-VAC-1	5425036931169	Smappee Power Box
AC-4P4GROUTER-1	5425036935594	Modular 4 Ports 4G LTE-router with DIN rail clip
EVU-FILTER-2	5425036935419	EV Ultra Louver filter kit
EVBU-CNV40-1	5425036933774	EV Ultra 40 kW Air Cooling Highly protective charging module
EVU-IMD-1	5425036935600	EV Ultra IMD
EVU-CBL-CCS250-3-1	5425036935921	EV Ultra 3 m Charging cable CCS 250 A (1.4.x)
EVU-CBL-CCS250-3-2	5425036935938	EV Ultra 3 m Charging cable CCS 250 A (1.5)
EVU-CBL-CSS250-5	5425036934559	EV Ultra 5 m Charging cable CCS 250 A
EVU-CBL-CSS250-7	5425036935723	EV Ultra 7 m Charging cable CCS 250 A
EVU-DISPLAY	5425036935617	EV Ultra Display
AC-IBC80-10	5425036935679	Smart Bus RJ10 Cable 80 cm - 10 pieces
i1-IAC-1	5425036931183	Smappee CT Hub
AC-RSCT-4CM	5425036934139	Rogowski coil 4 cm / 1.57 inches diameter
EVU-CONTROLLER-V4-80D-R	5425036936508	EV Ultra DC Charge Controller V4 - 40D - Right side
EVU-CONTROLLER-V4-80D-L	5425036936515	EV Ultra DC Charge Controller V4 - 40D - Left side
EVU-CONTROLLER-V4-240D-R	5425036936522	EV Ultra DC Charge Controller V4 - 120D - Right side
EVU-CONTROLLER-V4-240D-L	5425036936539	EV Ultra DC Charge Controller V4 - 120D - Left side
EVU-CMS-D-B	5425036936362	EV Ultra Dual connector cable management system

If you need another part than listed, please contact info@smappee.com.